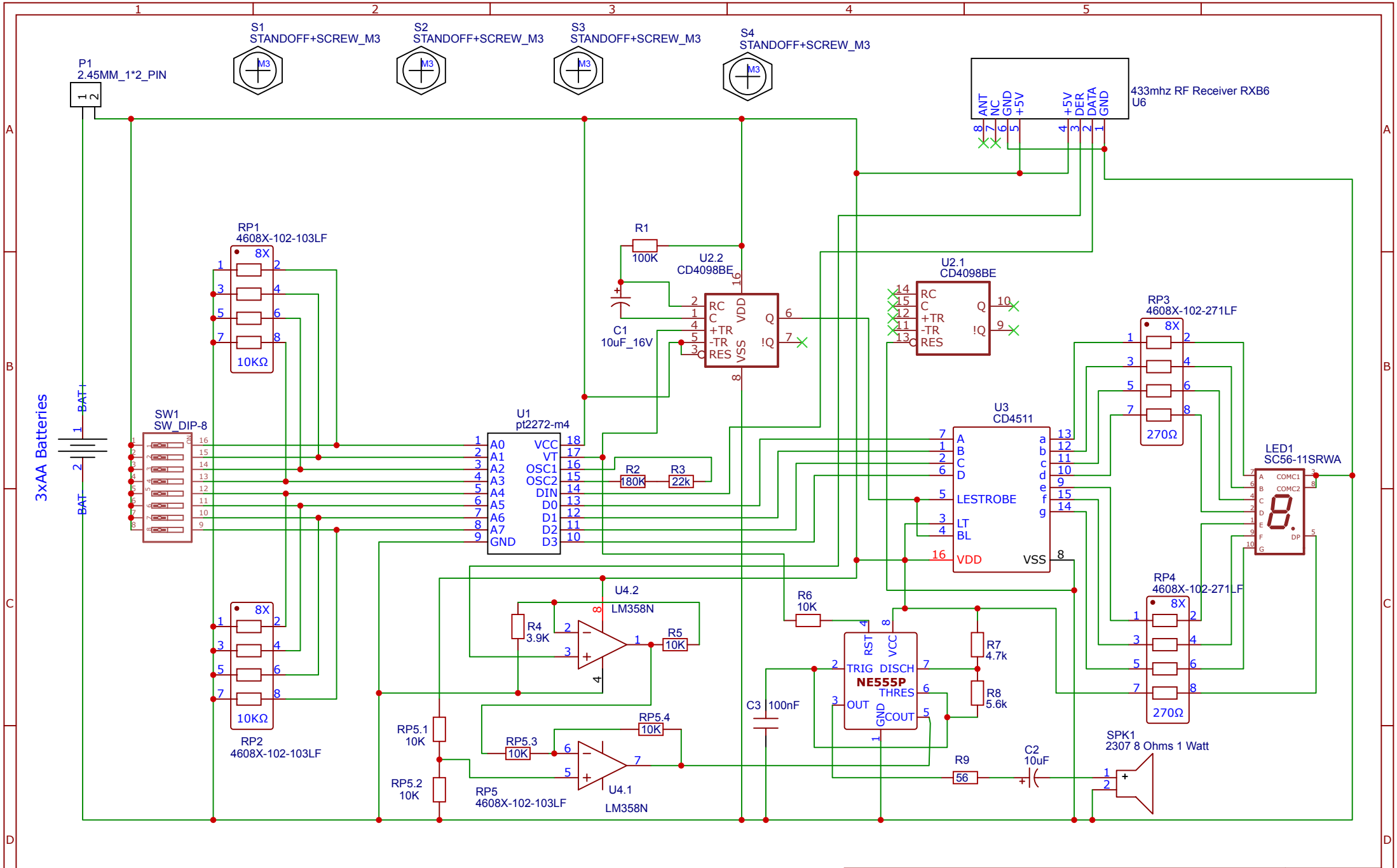

TITLE: Fox Hunt Receiver - V4 with RSSI		REV: 4.0
EasyEDA	Company: 1st Cobargo Scout Group	Sheet: 1/1
	Date: 11th May 2024	Drawn By: cobscouts