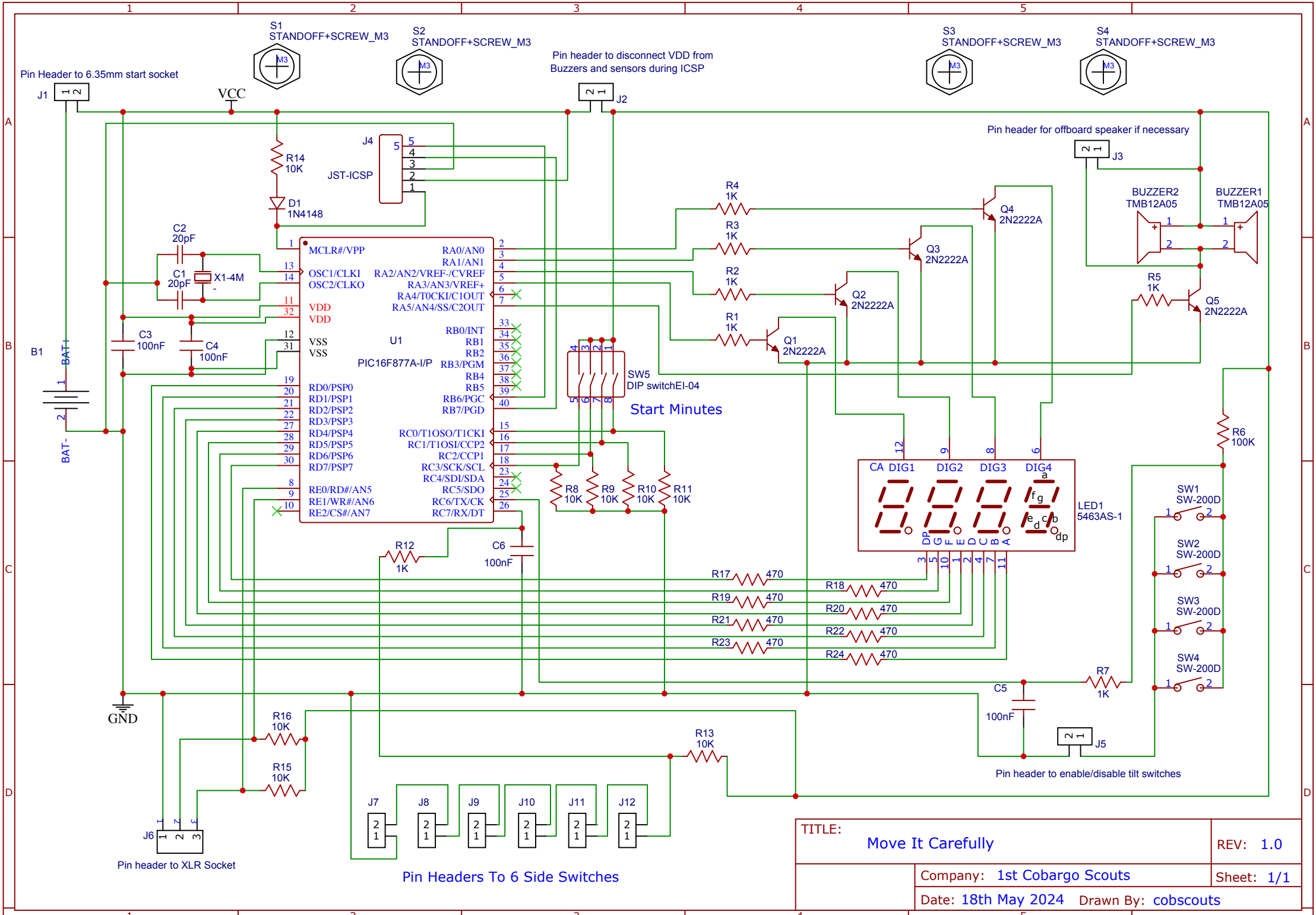

TITLE: Move It Carefully	REV: 1.0
Company: 1st Cobargo Scouts	Sheet: 1/1
Date: 18th May 2024 Drawn By: cobscouts	